TYPICAL TRENCH BACKFILL - FLEXIBLE CONDUIT

(EXCERPTED FROM COUNTY OF SAN JOAQUIN DRAWING NO. R-29)

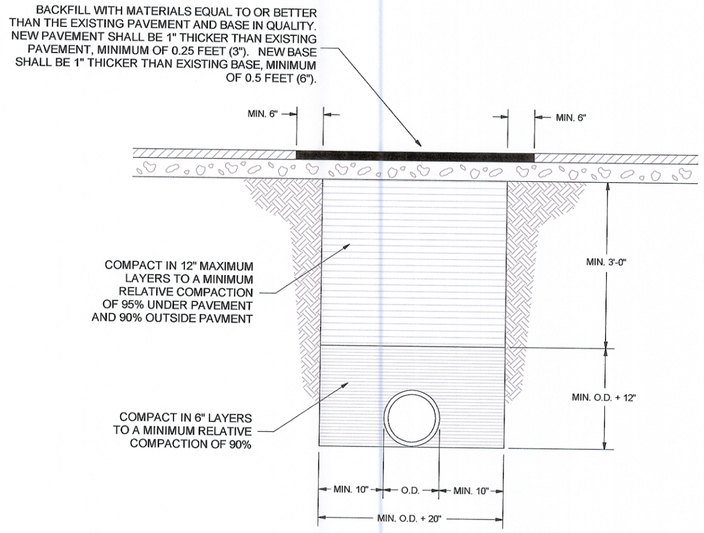

NOTES:

1. RELATIVE COMPACTION OF MATERIALS SHALL BE TESTED IN ACCORDANCE WITH THE STATE OF CALIFORNIA, DEPARTMENT OF TRANSPORTATION TESTING MANUALS, TEST METHOD CALIFORNIA NO. 216 OR CALIFORNIA NO. 231.
2. ALL EXISTING PAVEMENT SHALL BE NEATLY CUT TO LINE PRIOR TO TRENCH EXCAVATION.
3. JETTING OR PONDING WILL BE PERMITTED WITHIN THE STREET RIGHT OF WAY WITH A 3-YEAR BOND.
4. WHEN SHOWN BY SOIL COMPOSITION AND COMPACTABILITY, NINETY-PERCENT (90%) COMPACTION MAY BE USED, WHEN APPROVED BY THE DIRECTOR OF PUBLIC WORKS.
5. SPECIAL BEDDING REQUIREMENTS MAY BE SHOWN ON THE PLANS OR SPECIFIED IN SPECIAL PROVISIONS.
6. SHOULDERS SHALL BE AS SHOWN ON THE PLANS OR SPECIFIED IN THE SPECIAL PROVISIONS BUT IN NO CASE SHALL THE SHOULDER BE LESS THAN THREE FEET (3') WIDE AS MEASURED FROM THE EDGE OF PAVEMENT.

30"x48"x24" POLYMER CONCRETE BOX ASSEMBLY

ARMORCAST PRODUCTS NO. A6001430TAPCX24

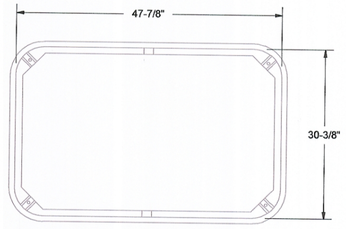

RPM BOX PLAN VIEW

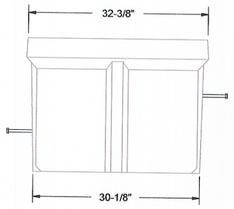

END VIEW

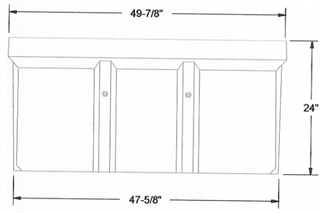

SIDE VIEW

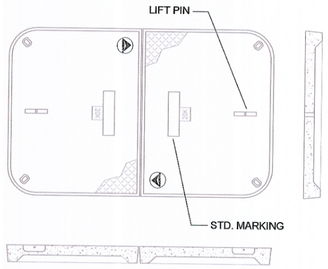

POLYMER CONCRETE COVER

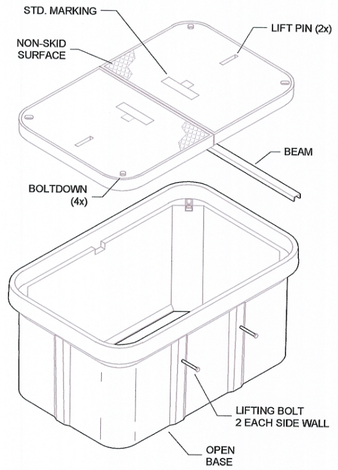

48"x48" MANHOLE ASSEMBLY

TOP VIEW

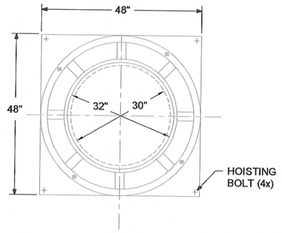

RPM ADAPTER TOP VIEW

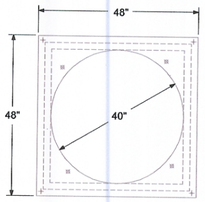

NOTES

1. MANHOLE TO BE INSTALLED OVER 6" CRUSHED BASE
2. SOIL BEARING PRESSURE: 2000 PSF
3. TOTAL WEIGHT OF ASSEMBLY: 1370 LBS
4. DESIGNED FOR H-20-44 VEHICULAR TRAFFIC
5. "RPM" - REINFORCED PLASTIC MORTAR
6. "FRP" - FIBERGLASS REINFORCED PLASTIC

ELEVATION

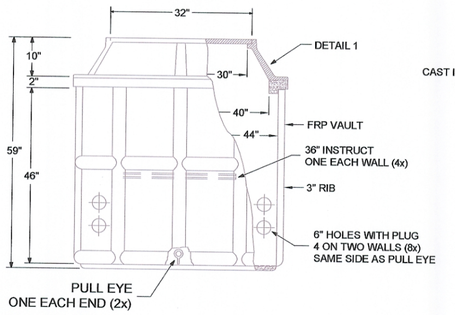

DETAIL 1

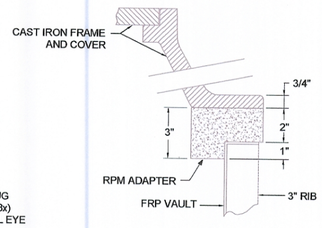

TYPICAL MARKER POST AND U-CHANNEL SUPPORT

WARNING SIGN

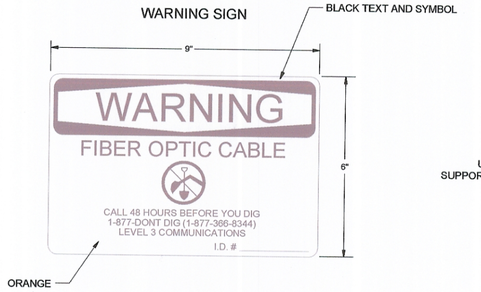

GALVANIZED U-CHANNEL SIGN SUPPORT

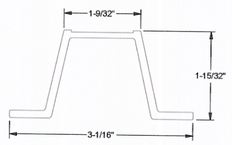

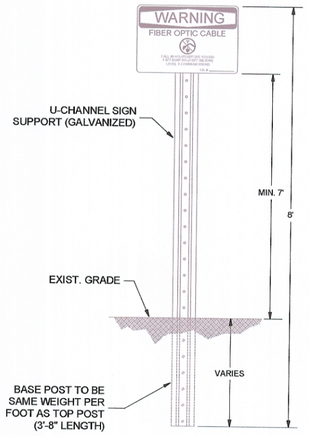

verizon

Level(3) COMMUNICATIONS

DATALOG	
INSTALLATION OF FIBER OPTIC FACILITIES	
DETAILS & STANDARDS	SHEET: 2 OF: 21
Hector A. Lara	DATE: 11/15/06
	RCE NO: 49312
DESIGN ENGINEER	EXP DATE: 9/30/08